WST-200 HOT / COLD WATER DISPENSER

The best tasting water that's better for you and the environment.

The WST-200 is a point-of-use WATER PURIFICATION SYSTEM that installs easily in your office to produce crisp, refreshing water without the hassles of plastic jugs.

Contemporary Design to Compliment Your Workplace

At just under ten inches wide, the WST-200's space saving design make it a perfect fit for your break room or lobby.

Pure, Alkaline Water

The WST-200 is the only slim profile cooler to purify and then enhance with minerals for a crisp taste and an alkaline pH.

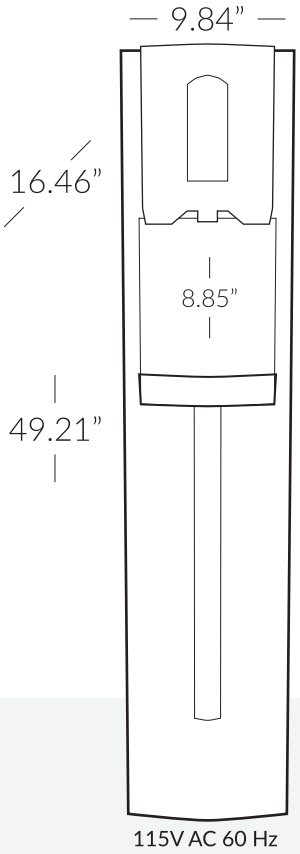

Features and Specs

Convenient Dispensing Height
Ergonomic and ADA compliant design for easy fill ups

Tall Dispenser Area
Designed to accomodate most reusable water bottles

Two-into-One Dispensing Valve
Self-sterilizes pour spout when hot water is dispensed

Leak Prevention
Patented Leak Guard technology detects and protects

Six Step Purification

1. Ultra-Violet Light
2. Sediment Filtration
3. Carbon Filtration
4. Reverse Osmosis
5. Carbon Filtration
6. Mineralization

another innovation from WaterStation TECHNOLOGY®